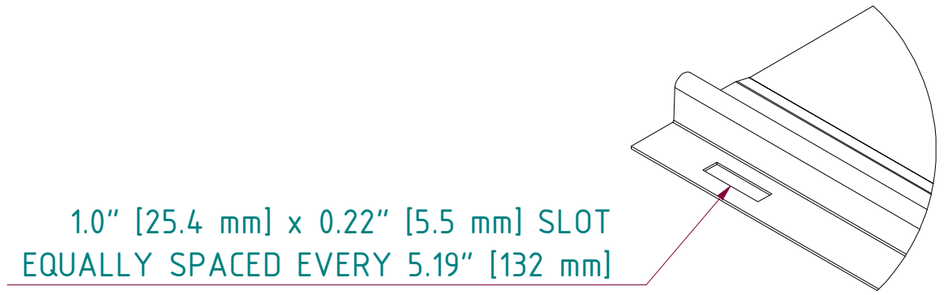

A (1 : 2)

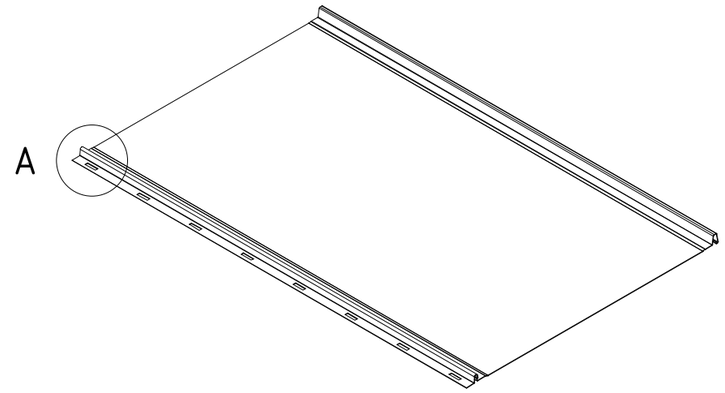

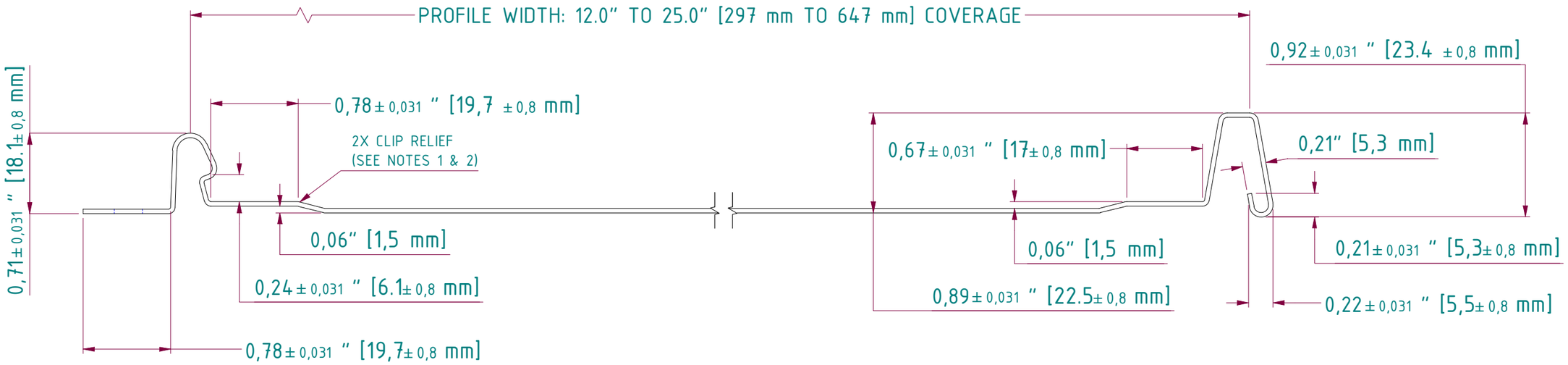

CIDAN Profile	inch"	mm
Material used	3.74	95

CIDAN Profile Name	Coil width	Profile width
CIDAN 1" Screw Strip	24.0"/609.6 mm	20.26"/514.6 mm

Painted	Surface treatment / Delivery state	Machine type	Machine size	Reference drawing	Weight 5.6 kg
For dimension without tolerance: ISO 2768 mK		Description CIDAN 1" Screw Strip		Size A3 / Scale 1:1	Sheet 1/1
CIDAN MACHINERY		Drawing type		Drawing number 33092	
		Designed by APE	Drawn by APE / Date 04-03-2026		Revision A

NOTES:

1. CLIP RELIEF ROLLERS ARE STANDARD WITH THIS PANEL.
2. PANEL IS SHOWN WITH CLIP RELIEF ROLLERS ENGAGED.
3. FOR PROPER RESULTS USE TENSION LEVELED MATERIAL.
4. YIELD STRENGTH:
5. DUAL DIMENSIONS: Inch [mm]
6. MAX COIL WIDTH: 29.0"
7. MIN COIL WIDTH: 16.0"

Machined surfaces, holes, fittings and threads are not to be painted.

Sharp edges broken.

Mill scale is not permitted.

Missing dimensions according to CAD model / drawing.

© by CIDAN Machinery - Refer to protection notice ISO 16016
The reproduction, distribution and utilization of this document as well as the communication of its contents to others without express authorization is prohibited. Offenders will be held liable for the payment of damages. All rights reserved in the event of the grant of a patent, utility model or design.