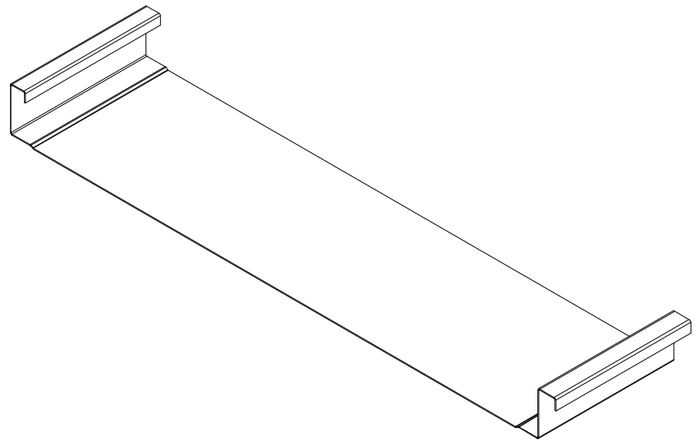

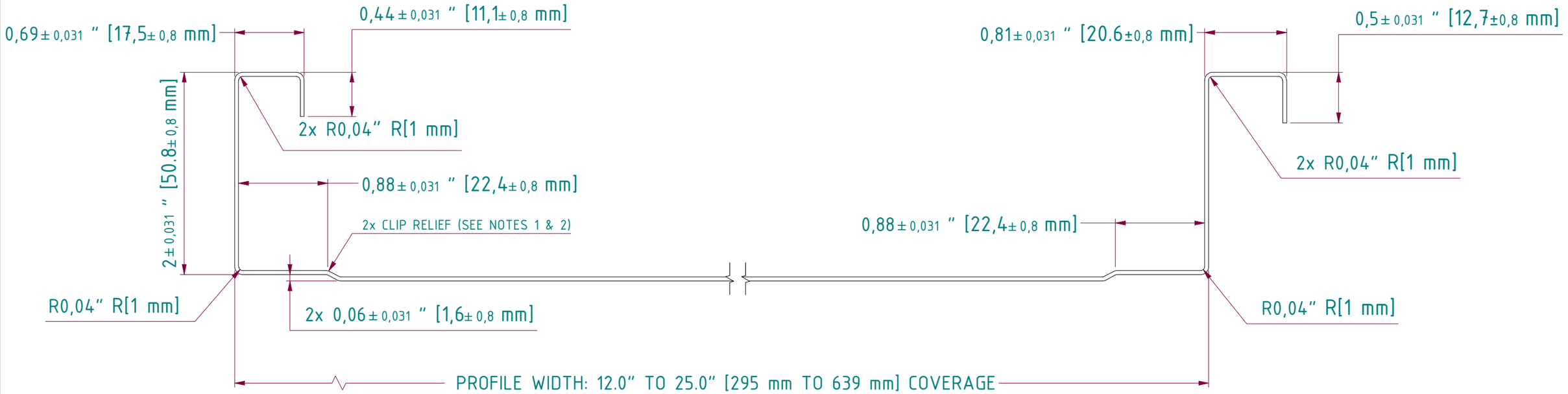

Machined surfaces, holes, fittings and threads are not to be painted.

Sharp edges broken.

Mill scale is not permitted.

Missing dimensions according to CAD model / drawing.

© by CIDAN Machinery – Refer to protection notice ISO 16016!
The reproduction, distribution and utilization of this document as well as the communication of its contents to others without express authorization is prohibited. Offenders will be held liable for the payment of damages.
All rights reserved in the event of the grant of a patent, utility model or design.

NOTES:

1. CLIP RELIEF ROLLERS ARE STANDARD WITH THIS PANEL.
2. PANEL IS SHOWN WITH CLIP RELIEF ROLLERS ENGAGED.
3. FOR PROPER RESULTS USE TENSION LEVELED MATERIAL.
4. YIELD STRENGTH:
5. DUAL DIMENSIONS: Inch [mm]
6. MAX COIL WIDTH: 31.0"
7. MIN COIL WIDTH: 18.0"

CIDAN Profile	inch"	mm
Material used	5.87	149

CIDAN Profile Name	Coil width	Profile width
CIDAN 2" Mechanical	24.0"/609.6 mm	18.13"/460.6 mm

Painted	Surface treatment / Delivery state	Machine type	Machine size	Reference drawing	Weight

For dimension without tolerance: ISO 2768 mK	Description	Size	Scale	Sheet
	CIDAN 2" Mechanical	A3	1:1	1/1

CIDAN MACHINERY

Drawing type

Drawing number: 33094

Designed by	Drawn by	Date	Revision
APE	APE	26-02-2026	A